NOVA G3 CHUCK
REVERSIBLE FOR COMET II MIDI LATHE
INSTRUCTION MANUAL

Thank you for purchasing your NOVA G3 Chuck Reversible for Comet II Lathe. The latest addition to our Woodturning Chuck range. We are confident that it will be a great aid towards fast workholding and enhance your woodturning capablity. The NOVA G3 is designed for a range of woodholding modes while being quick and easy to use.

FOR YOUR SAFETY

PLEASE READ & UNDERSTAND THIS INFORMATION BEFORE USING YOUR NOVA G3 CHUCK

DANGER: THIS CHUCK IS CAPABLE OF CONTRIBUTING TO SERIOUS INJURY, AS WITH ANY OTHER POWERTOOL ACCESSORY, IF USED IMPROPERLY ON THE LATHE.

Before using the Nova G3, read and understand this instruction manual and the lathe owner's manual. If you do not have a manual, contact the supplier of your lathe to obtain one before using the lathe and Chuck.
User must be professionally trained to use this chuck. Vocational school courses recommended. As with other chucking methods, an extremely cautious and sensible approach is necessary. With the Nova G3 Chuck it is not possible to give exact directions as to the amount of tightening pressure required for workholding. Follow closely strict guidelines in this manual for different jaw types on wood blank diameters and length, plus turning speed.

BEFORE USING THE NOVA G3 CHUCK MAKE SURE THAT -

- EYE PROTECTION WHICH COMPLIES WITH CURRENT ANSI STANDARD Z87.1 (USA) IS WORN. WE RECOMMEND THAT A FULL FACE SHIELD BE USED AT ALL TIMES.
- Chuck is properly secured on lathe spindle. Follow mounting instructions for your lathe for faceplates and other spindle fixtures.
- For safety, DO NOT ROTATE CHUCK UNDER POWER WITHOUT WOOD BEING GRIPPED.
- **WARNING:** EXCESSIVE SPEED IS A SERIOUS LATHE HAZARD. ALWAYS TURN AT THE SLOWEST SPEED POSSIBLE.
- Speed will vary with wood blank size. The larger the blank the slower the speed. Consult your lathe manual or lathe information plate for speed guidelines.
- DO NOT ATTEMPT TO USE THE CHUCK UNLESS THE LATHE SPEEDS ARE KNOWN, YOU MUST STRICTLY FOLLOW THE MAXIMUM SPEED LIMITS SET OUT IN THE OPERATING SECTION OF THIS MANUAL.
  DO NOT EXCEED THEM UNDER ANY CIRCUMSTANCES.
- EXAMINE WOOD CAREFULLY. ONLY MOUNT WOOD THAT IS SOUND, If any cracks, splits, or weakness is found in wood - DO NOT MOUNT ON CHUCK. DO NOT MOUNT ANY WOOD THAT IS LIKELY TO BREAK UP DURING TURNING (E.G. ROTTEN OR SPONGY WOOD). DO NOT USE POORLY JOINTED or LAMINATED WOOD.
- Make sure wood is clamped firmly. Follow mounting instructions for different gripping modes and jaw types. In the expansion mode do not use undue force or jaws may split the wood.
- Do not exceed maximum guidelines in this manual for wood blank diameters or lengths set out in this manual for different modes and jaw types.
  DO NOT USE WITH ANY COPYTURNER OPERATIONS.
- Check wood is securely held in chuck, before operation. Check grip by vigorously wrenching wood blank back and forth. If any loosening occurs, re-examine holding area for adequate grip (Following mounting guidelines) and any damage to holding area. Rotate manually to make sure of clearance before switching power on.
- **WARNING: FOR SAFE OPERATION**
  IT IS RECOMMENDED THAT TURNING BE CARRIED OUT WITH JAW SLIDES NOT EXTENDING BEYONG THE CHUCK BODY. HOWEVER THE JAW SLIDES CAN EXTEND ABOUT 6.35MM (1/4") BEYOND THE BODY OF THE CHUCK TO GIVE A WIDER RANGE OF EXPANSION, IF REQUIRED. **EXTRA CAUTION** MUST BE EXERCISED WHEN TURNING WITH JAW SLIDES EXTENDING BEYOND THE BODY OF THE CHUCK.
- Irregular or out of balance stock needs to be turned at the slowest possible speed until it is in balance. For use on outboard/left-hand rotation - MAKE SURE INSERT IS SECURELY LOCKED WITH GRUBSCREW BEFORE USE. Use only hand held woodturning chisels to shape wood being held in chuck.
- USE THE RIGHT CHISEL FOR THE JOB AND DO NOT FORCE TOOLS. Use safe and commonly approved chisel techniques. **Wherever possible stand to one side of the revolving wood.**
- WEAR PROPER CLOTHING. Do not wear any loose clothing, neck ties, gloves, bracelets, rings or other jewellery that could get caught in moving parts. Wear protective hair covering to contain long hair.
- Do **NOT** operate chuck or lathe while under the influence of **DRUGS**, **ALCOHOL** or any **MEDICATION**.
- **KEEP CHILDREN AND VISITORS AWAY**. All children and visitors should be kept safe distance from the work area.

Make workshop childproof with padlocks, master switches, or by removing starter keys.

PARTS LIST & EXPLODED DRAWING

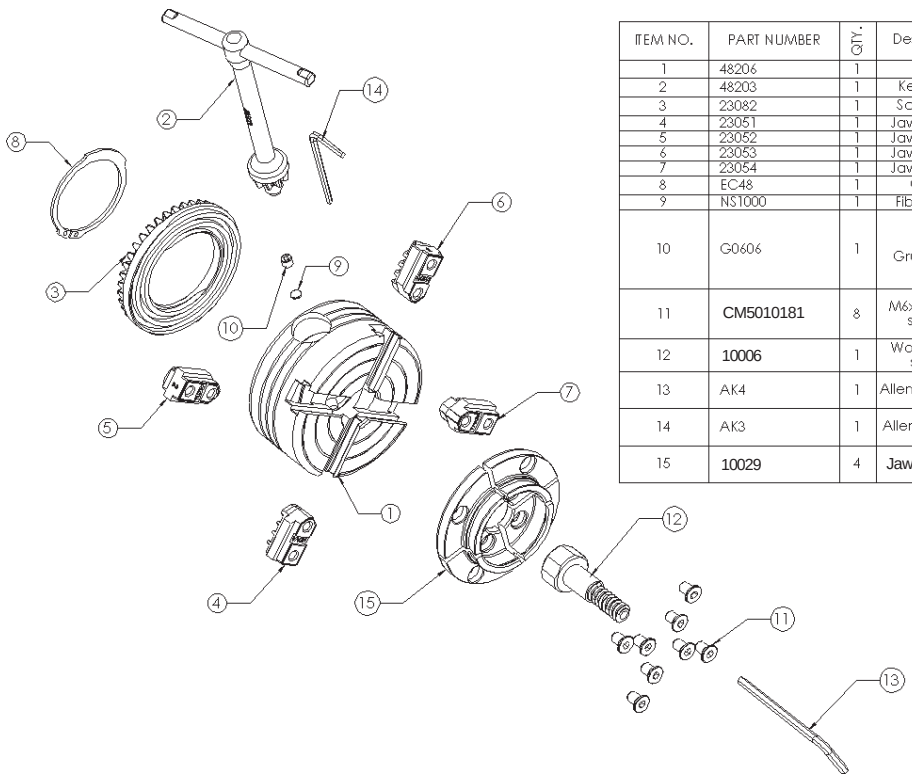

ITEM NO.	PART NUMBER	QTY.	Description
1	48206	1	Body
2	48203	1	Key Pinon
3	23082	1	Scroll Ring
4	23051	1	Jawslide #1
5	23052	1	Jawslide #2
6	23053	1	Jawslide #3
7	23054	1	Jawslide #4
8	EC48	1	Circlip
9	NS1000	1	Fibre WAD
10	G0606	1	M6X6 Grubscrew
11	CM5010181	8	M6x6 c/sunk screws
12	10006	1	Woodworm screw
13	AK4	1	Allen Key 4mm
14	AK3	1	Allenkey 3mm
15	10029	4	Jaw set 50mm

NB: Direct threaded chucks #9 & #10 not used
(with the exception of the 4-threaded direct chuck)

Publication Number: 110-1111-009

FITTING CHUCK TO LATHE

Check that the chuck thread specification matches the lathe spindle thread you have. This is important for accuracy. The chuck body must contact an accurate register on lathe, either a shoulder on spindle or bearing face etc to ensure chuck will run true. If further modifications are needed (e.g. spacer) these are the responsibility of the user. A good check is to see whether it screws home the same as a faceplate or similar spindle fitting.

DO NOT USE UNLESS CHUCK IS PROPERLY FITTED TO SPINDLE.
NB: LOCKING GRUBSCREW MUST BE USED & LOCKED IN PLACE IF USING THE REVERSE MODE FEATURE ON YOUR NOVA COMET II MIDI LATHE.

CHUCK OPERATION

Adjustment: The Nova G3 chuck features a chuck key, which locates easily and quickly into the gearing mechanism. The high powered gearing delivers outstanding grip at little effort. Moving in a clockwise direction will expand the jaws outwards (expansion), and moving the key in an anti-clockwise direction will contract the jaws inwards (contraction). For example, move the handle in an anti-clockwise direction to move the jaws to clamp a work piece inside the jaws, and then move the handle in a clockwise direction to release the work.

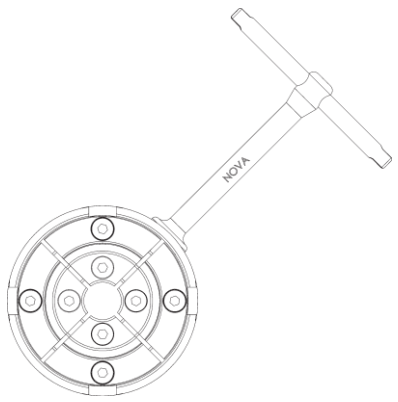

AUTO STOP FEATURE

The Nova G3 has an in built safety feature which prevents the jaws slides from becoming dislodged from the chuck. The auto stop feature is first in the industry doing away with shearing screws.

MOUNTING & DISMOUNTING OF JAWS

The Nova G3 chuck comes with no jaws attached. With the many jaws available it is very easy to use your single chuck for a very wide range of applications. All jaws in the Teknatool range for the Nova G3 are secured and attached the same way.

Attaching Jaws - To mount the jaws to the Nova G3 chuck is another easy process. Firstly wipe clean all jaw slides, especially the contact surfaces. Repeat this with all four jaws you wish to attach. Jaw slides are numbered one to four and have a corresponding jaw - of the same number. This may be represented by dots if numbers are not present, i.e. 3 dots = #3. Place a jaw on its correct jaw slide and position into the groove (location ring out from the jaw into the groove of the jaw slide). The first few times, you may need to GENTLY tap the jaws into the locater slot with a block of wood or plastic mallet. Place M6X10 counter sunk screws in jaws and screw them to finger tightness. When both screws are in nip them up and back off half a turn. Repeat this to the remaining three jaws. Now using the Chuck key, scroll all jaws towards middle until they all come together. Now with all jaws touching and equal pressure on each, tighten all screws up. This will eliminate any run out. Ensure that there are no gaps between the jaws. If a gap does appear, it will probably be due to a jaw being placed on its wrong number (e.g. a #2 jaw on a #3 jaw slide).

To Remove Jaws - Simply using the 4mm Allen key supplied, unscrew all M6 counter sunk screws (there are eight of them). The jaws will come away once their screws are released. Sometimes due to dust particle build up (after heavy turning) the jaws may need a very light tap with a plastic hammer to dislodge them. It is important to keep them in their set so not to mix them up with other jaws of the same type.

IMPORTANT NOTE:
Accessory Jaws: Although the Nova G3 is compatible with all the Teknatool Accessory Jaws, it is not recommended that the larger accessory jaws be used, as they will hold work to larger capacities than is recommended with the Nova G3. For instance, we do not recommend that the following accessory jaws are used with the Nova G3: 130mm Jaw (JS130N),PowerGrips (PJSN), Titan PowerGrips (13029) Moreover, it is not recommended that work exceed a diameter of 14" and a depth of 5" with this chuck.

DOVETAIL OPERATION

Expansion of the jaws into a recess - This function is for bowl and platter turning where the projection (depth) of the wood blank is not too great i.e. up to 100mm (4 inches). Characteristically these items have a parallel wood grain. IT MUST NOT BE USED FOR ANY LONG WORK (OVER 100mm or 4 inches) AS THERE WOULD BE GREAT DANGER OF WOOD TEARING OUT AND DISLODGING FROM CHUCK.

Instructions below apply to the standard 50mm (2 inches) jaws but the general technique is the same with other accessory jaws. However, the maximum size of wood blank that can be mounted, the maximum turning speed and recess size varies with the different accessory jaws. Consult specific instructions included for each jaw set.

This strong holding method, using the standard 50mm (2 inches) jaws, you can turn bowls up to 350mm (14 inches) in diameter. DO NOT EXCEED 600RPM WITH THIS OPERATION. OUT OF BALANCE STOCK MUST BE TURNED AT THE SLOWEST SPEED POSSIBLE.

50mm jaws - Any recess can be turned between 50mm (2 inches) and 70mm (2 3/4" inches) diameter. For smaller lids and thin platters (not exceeding 150mm or 6 inches diameter) only a shallow recess of around 3mm (1/8 inch) is necessary. It will be matter of gaining experience as to what combinations and sizes will best suit.

USING THE WOODWORM SCREW

The woodworm screw supplied with the Nova G3 chuck is purpose designed for screw chucking. It is a cylindrical screw which maintains its full holding power along the whole length, unlike normal tapered screws. The thin thread form is specially designed to cause minimum damage to wood fibers. They grip better than screws because there is a larger volume of undamaged wood retained within the screw.

The woodworm screw is made complete with the boss section in one piece. The woodworm screw is to be used with the jaws remaining on the chuck. This facility is very convinent for remounting work directly onto the jaws after the screw is removed. *(see more, page over)*

USING THE WOODWORM SCREW (contd.)

To convert to this operation , place the boss section into the centre of the chuck and close jaws into the slots. BEFORE FINAL TIGHTENING MAKE SURE THAT THE FRONT OF THE BOSS SECTION OF THE SCREW IS SEATED BEHIND AND AGAINST THE 50mm (2 INCHES) JAWS. This will prevent any tendency for the boss section to creep forward when the screw is being used. **NB: Recommended pre-drill size is 9/32" (7mm) for soft woods and 5/16" (8mm) for hard woods.**

The front face of the jaws have been machined to provide an accurate backing surface. This is quite an advantage, providing a much tighter fit and wider tolerance for irregularly faced stock. This feature is also quite an advantage when using the screw to mount a bowl for first stage bowl turning - forming the outside of the bowl to be put straight onto the jaws (the screw is first removed) after the recess has been formed.
The woodworm screws provides 15mm -1/2mm OR 39/64" (0.609") of thread beyond the jaws. Irregular, rough tree blanks (e.g. small sections of tree limbs) not exceeding the above sizes can be held quite firmly BUT caution must be exercised. Check for adequate contact. DO NOT USE THE SCREW FOR VERY LARGE WOOD BLANKS. Its intended for small bowl and screw chucking work. The maximum capacity which should be mounted on the screw is 250mm (10 inches) diamter X100mm (4 inches). DO NOT EXCEED 600 RPM FOR THIS OPERATION, and use tailstock with a live centre for support.

FORMING RECESS

The jaw dovetail has been designed for use with a standard skew scraper. This chisel will make a recess to the angle required. FOR SAFETY REASONS WE STRONGLY ADVISE AGAINST USING ANY OTHER TOOL. A profile of this chisel is shown below. It is best to work with a tool, which is already ground, to the correct angle. All that is necessary then is to keep the leading edge of the chisel flat on the wood, moving forward and out to form the recess to the required diameter and depth. Mount bowl blank on screw as described in previous section. It may be convenient to first mark out with a pencil, a circle on the bowl blank. To mark out the recess diameter with pencil, hold pencil point to desired radius, supported on the toolrest. Then revolve blank by hand thus creating a pencilled circle. However, as specified above, any recess diameter can be made between 50mm (2 inches) - 75mm (3 inches) so exact sizing of the recess is unnecessary.

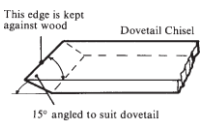

Before scraping out the recess, slightly hollow out the centre of the bowl blank with a bowl gouge or round nose scraper. The purpose is to relieve the centre so that when the recess is scraped out only half the chisel edge needs to be used. We recommend this to reduce tearing of the wood by scraping action; and to make the recess a little more finished to give a better effect to the overall bowl. extra embellishments can also be made to the recess to enhance the bowl. After the recess is finished and the outside of the bowl is turned to shape, wind bowl back off screw. Bowl blank is now ready to be reversed into the jaws. Expand the jaws into the recess. When the jaws are expanded out into the recess, screw the wood blank gently back and forth to make sure it is seated properly on the bottom face of the jaws.

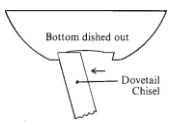

WARNING: MAKE SURE THE JAWS ARE SEATED PROPERLY IN THE RECESS AND THAT THE BOWL IS NOT INCORRECTLY RIDING ON THE FLAT SHOULDER SECTION OF THE JAWS BEHIND THE DOVETAIL. THIS COULD LEAD TO THE BOWL DISLODGING FROM CHUCK. LOOSEN JAWS AND REMOUNT CORRECTLY.

Now give a few gentle raps with the end of a chisel handle or wooden mallet around centre of bowl. Use pinion handle to give an give an extra nip up. Refer to Chuck Operation. Refer again to safety before operation.

SPIGOT OPERATION

This is where the jaws contact around a wooden spigot for grip. This function is mainly for box, goblet and vase turning, that is, end grain items with a fair degree of overhang. This situation is one of the most difficult to provide secure holding no matter what fixing method is used.

EXTREME CAUTION WITH THIS OPERATION MUST BE EXERCISED. DO NOT EXCEED 850 RPM FOR THIS OPERATION. If used properly, the Nova G3 Chuck provides a very powerful and secure grip in this mode.

Instructions below apply to the standard 50mm (2 inches) jaws but the general spigot technique is the same for other jaw types. However, maximum turning speed and recess size varies with different jaw types. Consult accessory jaw manual or instruction sheets. With the standard set of 50mm (2 inches) jaws a maximum size woodblank of 100mm (4 inches) diameter (NOT spigot size) by 150mm (6 inches) length can be turned. Square timber of same length and between 40mm (1.5 inches) to 50mm (2 inches) and grip of all four jaws into wood. MAKE SURE YOU HAVE AN ADEQUATE GRIP BEFORE OPERATION by vigorously wrenching the limb mounted on chuck. If any loosening occurs DO NOT PROCEED with operation. Repeat tightening procedure and re-test grip.

SPIGOT SIZE:

Standard Jaws will grip a round spigot between 45mm (1 49/64inches) to 65mm (2 5/16 inches) approx. Square timber between 40mm (1 37/64inches) to 50mm (2 inches) square approx.
Jaw slides only - With the 50mm (2 inches) add-on jaws removed, the jaw slides will grip either round or square timber down to 8mm (5/16inch). Length limits are the same for spigot work. Small work not greater than this diameter can be turned at a speed NOT EXCEEDING 1800 RPM. Larger work held in the jaw slides should NOT EXCEED 850 RPM.

FORMING SPIGOT:

When selecting wood make sure it is sound without splits or weakness - especially around the area where the spigot is to be formed. REMEMBER WITH FREE END TURNING, THIS IS THE ONLY AREA FOR GRIP. IF ANY WEAKNESS IS FOUND, DO NOT PROCEED. Mount wood between centres and turn the spigot area. Make the spigot as parallel as possible to maximise the efficiency of the clamping action. Only approximate sizing of the spigot is necessary, as the jaws will accommodate a wide range of spigot diameters within the spigot limits stated above. The 50mm (2 inches) standard jaw has a thin lip (or shoulder at the front face) which is designed to bite into the timber as the jaws are tightened. DO NOT CUT A RECESS FOR THE LIP TO FIT INTO, AS THIS WILL REDUCE GRIPPING POWER.

WARRANTY

Serial Number:

You can register your warranty online by visiting www.teknatool.com
This Teknatool warranty is backed by a period of twenty-four months from the date of purchase. Teknatool International Ltd hereby agrees to make repairs or replace components without charge for any defects due to faulty material or workmanship, provided that - a) The warranty period has not elapsed. Proof of purchase date (sales slip, registration of warranty etc) would need to be forwarded to Teknatool International. b) If, in our opinion, the unit has not already been altered, repaired or modified in any way that would affect it's operation; has not been subjected to misuse, negligence, accident or not used strictly in accordance with instructions. c) Where necessary, transportation is prepaid by the customer to the Factory Service Centre (or other uthorised Teknatool Service Centre)
Warranty does not cover costs or damages arising directly or indirectly from the operation of this Teknatool product. No other guarantee, written or verbal is authorised by Teknatool International Ltd. Our Teknatool Distributors can issue their own warranty to cover this product. Their terms may vary from what is stated above - please check with your dealer if you have any questions. Email our service contact: service@teknatool.com. Our policy is one of continuous improvement. We therefore reserve the right to change specifications/designs without notice.

NOVA G3 CHUCK REVERSRIBLE FOR NOVA COMET II MIDI LATHE

DESIGNED EXCLUSIVELY FOR THE NOVA COMET II MIDI LATHE

Ideal for your Woodturning

Fits Nova & SuperNova Accessories

Fast, strong geared grip

TEKNATOOL INTERNATIONAL Ltd.
www.teknatool.com

Teknatool International Ltd, PO Box 305378 Triton Plaza, North Shore 0757,
Auckland, New Zealand
PH: +649 477 5601 FAX: +649 477 5600
Email: sales@teknatool.com Website: www.teknatool.com

SPECIFICATIONS
Thread Sizes: 1"8 tpi,
Warranty: 2 Year Comprehensive - see details
Weight: 1.53kgs/ 3.373lbs on spindle.
Body Diameter: 88,mm/3.48"
Standard Equipment: Chuck body, 50mm jaws, chuck key, fastenings, instruction manual.

See back of this sheet for the instruction manual.

Learn More
Visit our website
Free Project Ideas
Videos Manuals
Frequently Asked Questions
Register Warranty
www.teknatool.com

Screws directly into your lathe spindle (same as a faceplate) Available in popular 1"8TPI RH

FITS MOST LATHES

Ideal for mini, midi and all lathes up to 7" centre height (14" diameter over bed) Can also be used for small work on larger lathes. SuperNova and Titan chucks are recommended for larger work. See website or reseller for more information.

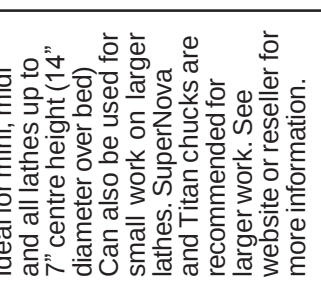

IDEAL LATHE SIZE

Fully compatible with all Nova, SuperNova and SuperNova² accessories. Widest accessory range of any chucking system on the market means you can tackle a wide range of projects.

It's not recommended to use the larger Teknatool Accessory Jaws with this chuck.
See manual for more.

VERSATILE

Screw chucking function, using the Nova Woodworm Screw (included with chuck) For the first stage mounting of wooden bowl blanks.

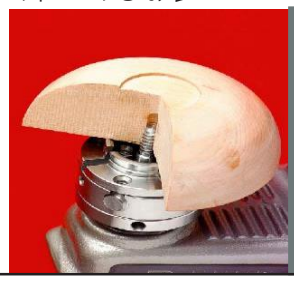

WOODWORM SCREW

Teknatool International Ltd, PO Box 305378 Triton Plaza, North Shore 0757,
Auckland, New Zealand
PH: +649 477 5600 FAX: +649 477 5601
Email: sales@teknatool.com Website: www.teknatool.com